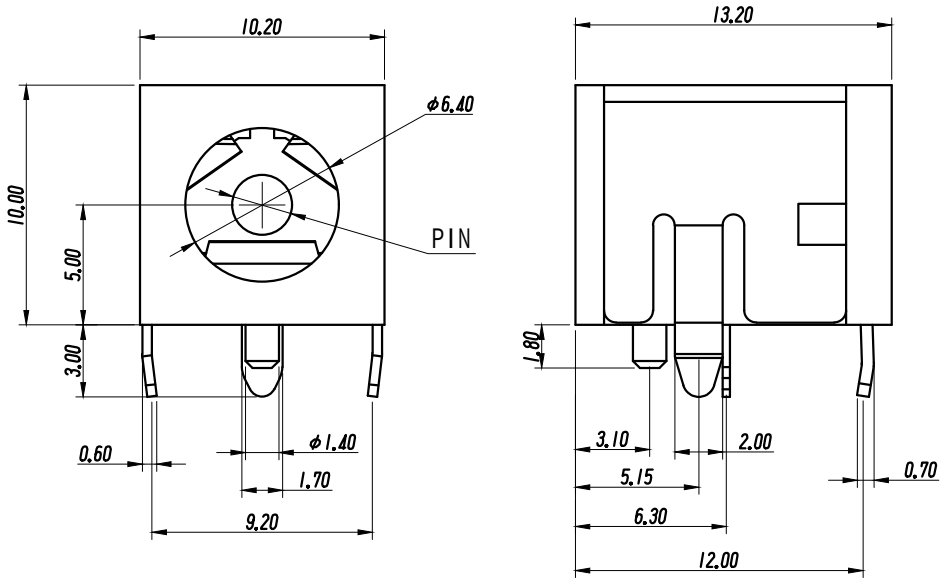

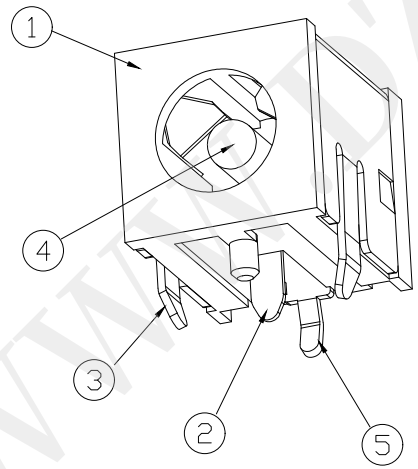

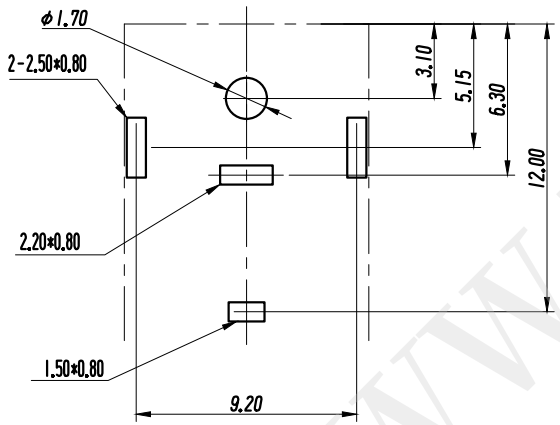

PCB LAYOUT
TOP VIEW (TOLERANCE:±0.05)

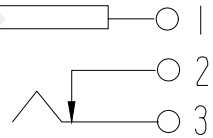

SCHEMATIC

PIN	2.0	2.5

技术特性:

使用条件: －３０～７０°
额定负荷: ＤＣ３０Ｖ １０Ａ
接触电阻: ≤0.02Ω
绝缘电阻: ≥100mΩ DC250V
耐　　压: AC250V(50Hz)/min
插 拔 力: 3～15N
寿　　命: 5000次

序号	名　称	数量	材　料	备 注
6				
5	平　片	1	磷铜0.65 δ=0.50mm	
4	插针PIN	1	H59黄铜棒(Y)	D.CuSn
3	外　壳	1	H62黄铜带 δ=0.4mm	D.CuSn
2	弹　片	1	磷铜0.65 δ=0.30mm	D.SnSb
1	基　座	1	PA9T	黑

深圳市华宇创精密电子有限公司

TOLERANCE: X.X ±0.30 X.XX ±0.25 X.XXX ±0.15 X.° ±2° X.X° ±0.5°	DRAWED BY: 陈一鸣	DATE: 2014-02-23	PART NAME: DC-090 4P
	CHECKED BY: 马跃	DATE: 2014-02-23	PART NO. HYC-DC0904P-XXX
UNIT: mm [inch]			MOLD NO.
	APPROVED BY: 邱敏	DATE: 2014-02-23	DRAW NO: HYC-2301091702
SCALE:1:1 SIZE: A4			SHEET NO. 1 OF 1

WWW.DZYJZJ.COM